ELEVATE
PLATFORM LIFTS

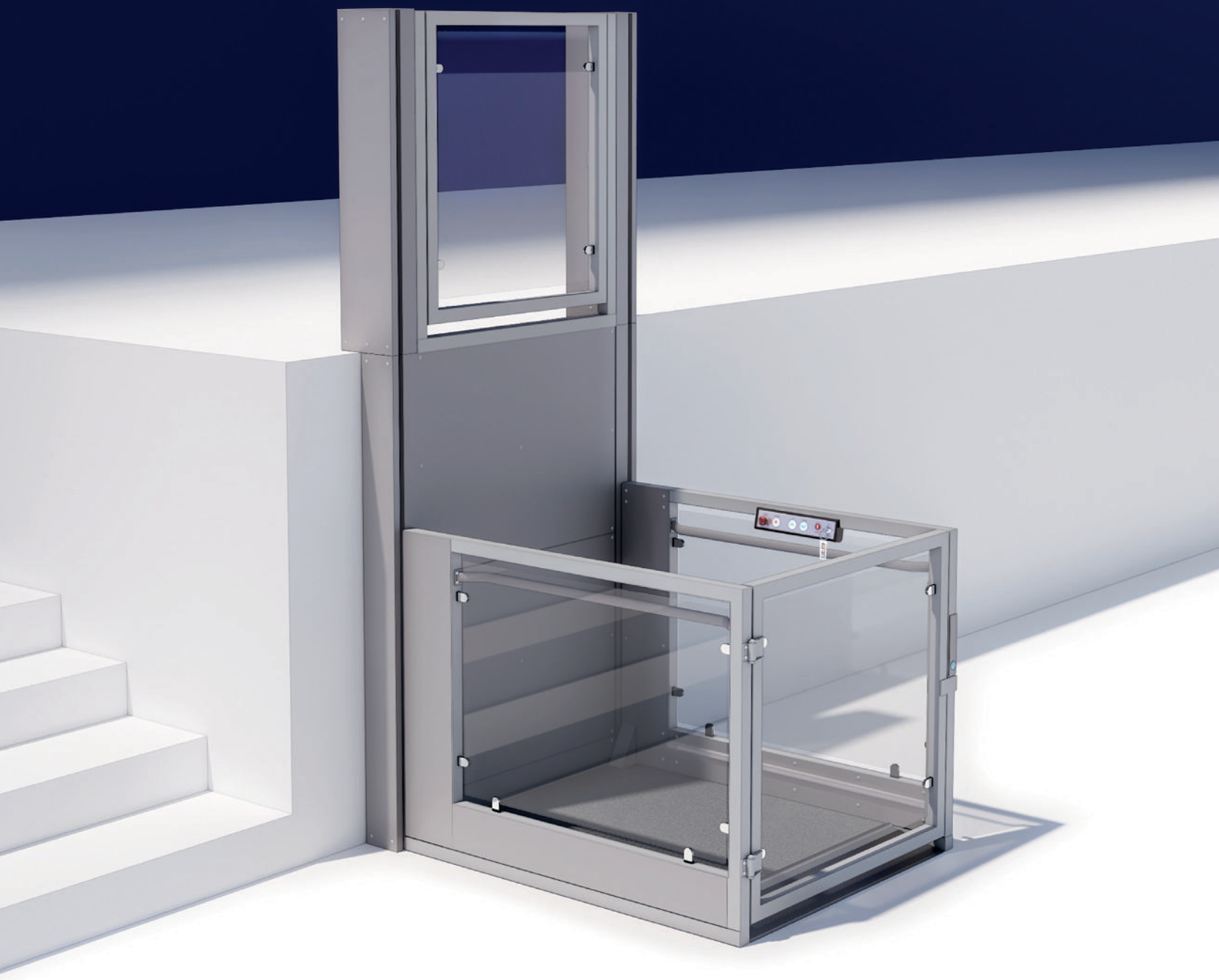

HORIZON

Wheelchair access
on another level

HORIZON

The Elevate Horizon is a vertical platform lift delivering reliable wheelchair access with a sleek, space-saving design for homes and public buildings.

The Horizon gives you a safe, comfortable way to move between levels at home or outdoors. It's a practical solution for wheelchair users, people with limited mobility, or anyone looking for everyday ease.



Safey First
Integrated emergency power supply, controls and platform lighting

Weatherproof
The perfect solution for indoor and outdoor access

Made to Measure
Designed to fit within your space

Low Maintenance
Easy to maintain and clean

3-YEAR WARRANTY

Accessibility

The Horizon has been designed for user convenience, comfort and complete control.

Providing seamless vertical travel over two levels, ideal for multi-storey homes, garden and driveway access.



Key Lock

Powers the lift on when ready to use and turns it off to prevent any unwanted use.

Wide Access

The hinged gate opens smoothly to allow unrestricted access.

Ramp

The integrated ramp gives seamless access on and off the platform.

Remote Control

The Horizon remote allows the user, or assisstant, to operate and call the lift to their desired level.



Features & Benefits

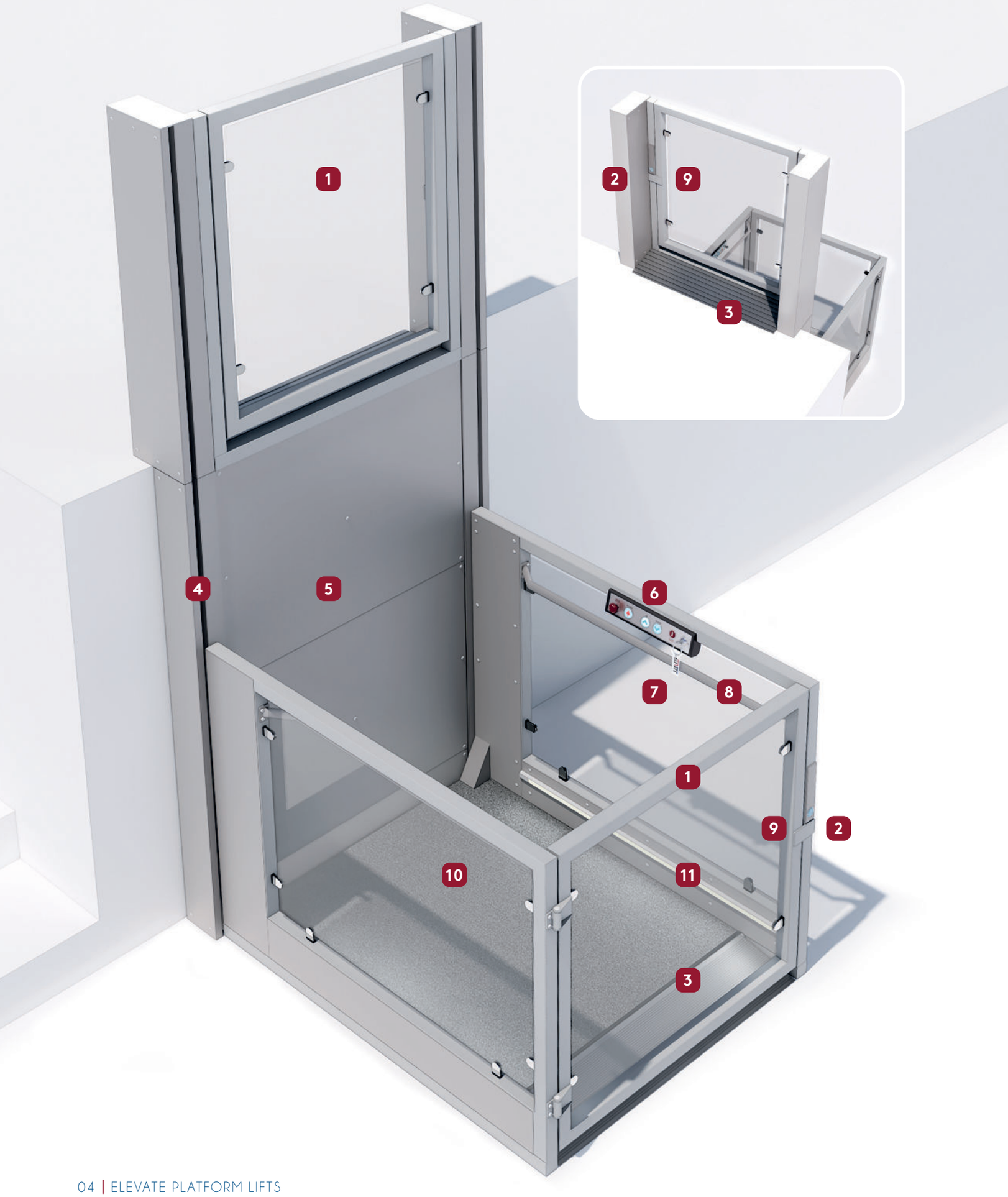

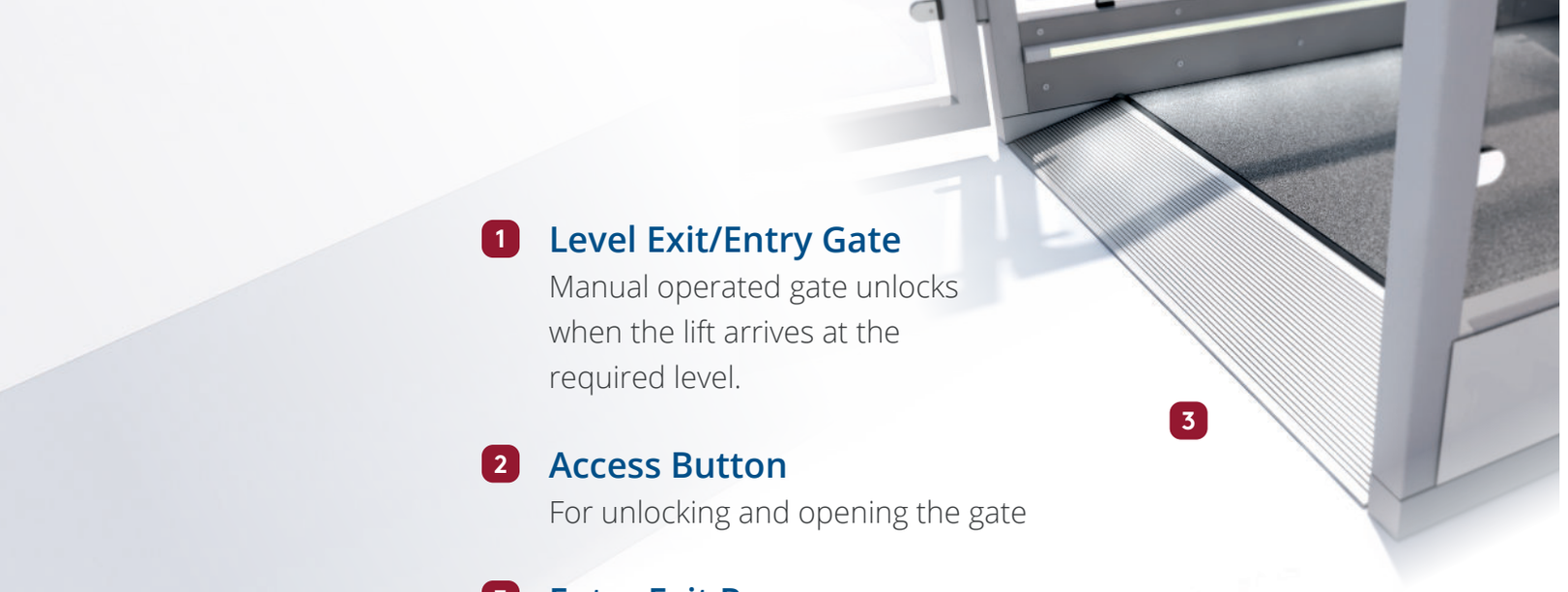

1 Level Exit/Entry Gate
Manual operated gate unlocks when the lift arrives at the required level.

2 Access Button
For unlocking and opening the gate

3 Entry Exit Ramp
Flexible, anti-slip, alluminium ramp.



4 Hydraulic Mechanism
Smooth and safe travel with integrated power supply.

5 Wall Cladding
Made from lightweight alluminium.



6 Control Panel
Easy to understand and operate controls with safety features.

7 Tempered Glass Panels
10mm thick glass that is safe and stylish and easy to clean.



8 Handrails
To assist holding the passengers steady during travel.

9 Safety Locks
Located on both entry/exit gates that unlock on arrival.

10 Platform
Anti-slip surface giving additional grip during travel.

11 Lighting
Ensures safe use, day or night, on and off the platform.



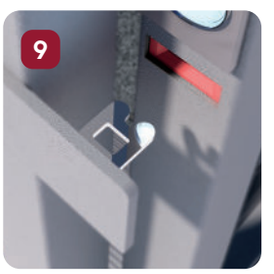





Travel

Soft start-stop motion gives the user comfort during travel.









Simple

Up or down buttons controls the direction of travel.



Weight Limit

If the weight limit is exceeded, the warning light activates and the lift won't operate.



Emergency Stop

Bringing the Glide to an immediate halt in case of an emergency. Turn to continued travel.

Assistance Alarm

To let the user quickly call for help if they need support while using the lift.

Gate Latch

Stays locked and releases when the lift has come to a complete stop. The lift won't operate if open.

Options

Further enhancing the Horizon with additional features.

HD Platform

Robust, anti-slip steel plated platform for added strength and durability.

Call Station

The easy-to-reach lockable call button lets the user bring the lift to their chosen level. Wall-mounted or column option available.





Automatic Gate

With the touch of a button, the powered hinge fully opens and closes the gate for easy access and exit.

ELEVATE
PLATFORM LIFTS

We provide wheelchair accessibility solutions that restore mobility and independence back into the heart of our customers' homes.

Our products are designed to provide easy-to-use operation and confidence when accessing different levels, offering a safe and reliable alternative when stairs aren't a viable option.

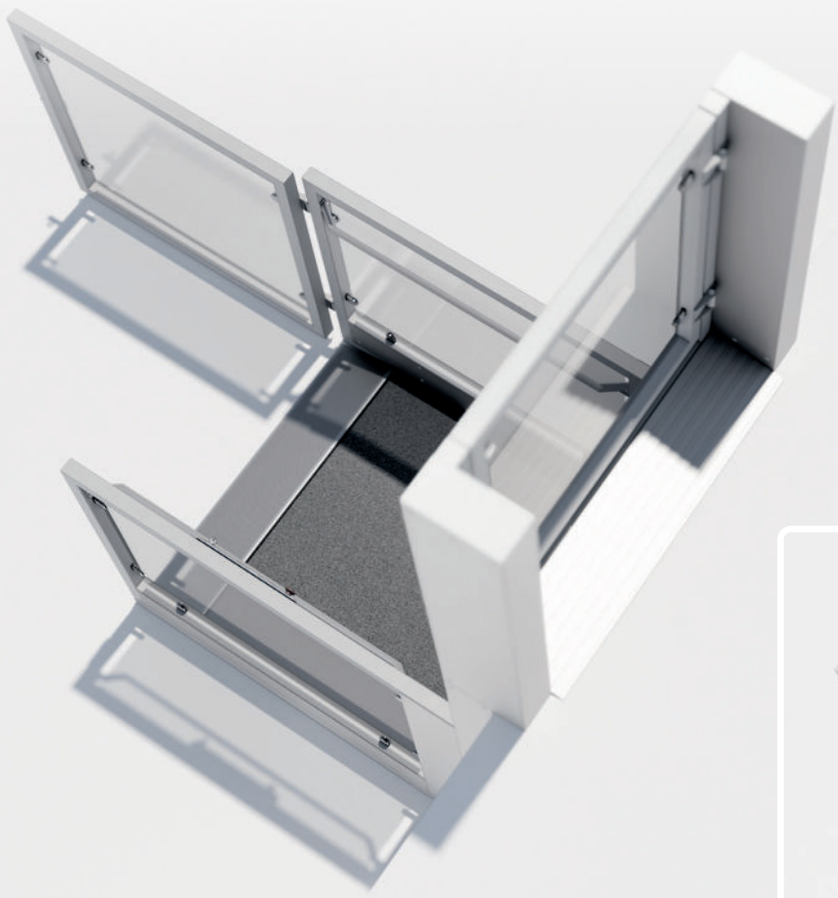

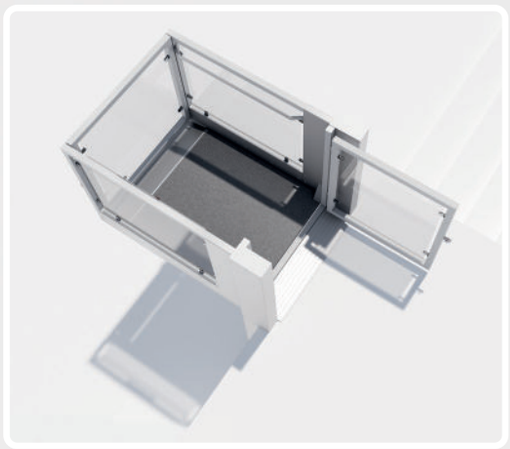

Please ask your representative or contact Elevate for further information

Call to see how we can assist you today

0808 175 4404

www.elevateplatformlifts.com